INNOTECH ENGINEERING DEVICES PRIVATE LIMITED

COMPUTERIZED TORSION TESTING MACHINE – TORQUE & TWIST TESTER



CONCEPTUAL DIAGRAM – PRINCIPLE & MAJOR COMPONENTS

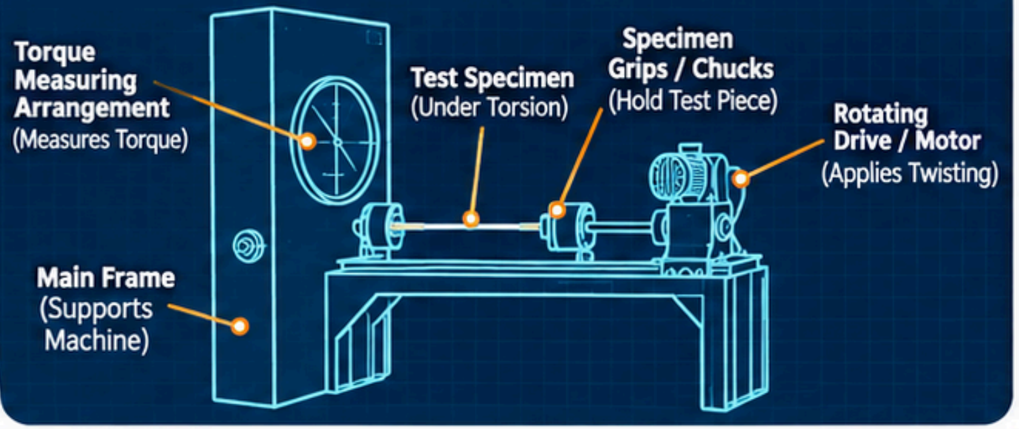

ORTHOGRAPHIC & ISOMETRIC VIEWS

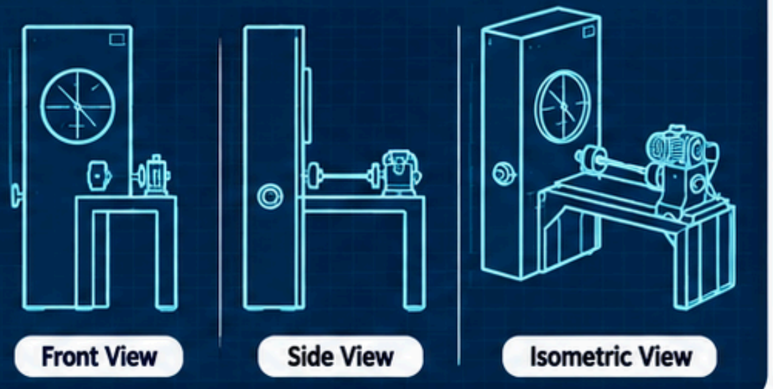

KEY FEATURES

- **Horizontal Torsion Arrangement**
- **Application-Specific Gripping**
- **Torque and Twist Evaluation**
- **Optional Computerized Data Acquisition as Configured**

TECHNICAL SPECIFICATION

Torque capacity	Customized as per customer requirement
Specimen diameter and length	Customized as per customer requirement
Rotation speed	As per application and approved drive design
Measurement/software configuration	As per approved customer requirement

Specifications and configuration are subject to customer requirements and final technical approval.

INNOTECH ENGINEERING DEVICES PRIVATE LIMITED | www.innotechgroup.net | info@innotechgroup.net | +91 9810431604 | Bhiwadi, Rajasthan, India